N 186.3 SERIES
PROCESS VACUUM PUMPS

N 186.3 SP.9 E

ADVANTAGES

- Twofold safety: The combination of a working diaphragm and an additional safety diaphragm prevents gas from escaping in the event of a fracture (.12)
- The robust design will hold up to challenging operating conditions
- High level of gas tightness Following leakage rates are available:
  .9 ≙ < 6 x 10^{-3} mbar l/s
  SP.13 ≙ < 6 x 10^{-6} mbar l/s
  ST.13 ≙ < 1 x 10^{-5} mbar l/s
  SP.12 ≙ < 6 x 10^{-6} mbar l/s

POSSIBLE AREAS OF USE

- Energy technology – especially in nuclear facilities
- Chemical industry
- Process industry
- Research and development

Please visit our website
www.knf.com
to get more information

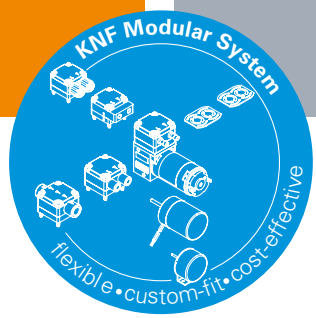

PERFORMANCE DATA												
Series model	**N 186.3**											
Material design	**AP.9 E**		**SP.9 E**		**SP.13 E**		**SP.12 E**		**ST.9 E**		**ST.13 E**	
Pump head	Aluminum		Stainless steel									
Diaphragm	EPDM								PTFE-coated			
Valves	Stainless steel											
Flow rate at atm. pressure (l/min)	23.0 ± 10 %								21.0 ± 10 %			
Ultimate vacuum (mbar abs.)	15								25			
Max. operating pressure (bar rel./psig)	0.5/7.3											
Permissible ambient temperature (°C)	+5 ... +40											
Permissible media temperature (°C)	+5 ... +40											
Weight (kg/lbs)	25.0/55.0		29.5/64.9				30.5/67.1		29.5/64.9			
ELECTRICAL DATA												
Voltage (V)	230	230/ 400	230	230/ 400	230	230/ 400	230	230/ 400	230	230/ 400	230	230/ 400
Motor	Capac-itor motor	Three-phase motor	Capac-itor motor	Three-phase motor	Capac-itor motor	Three-phase motor	Capac-itor motor	Three-phase motor	Capac-itor motor	Three-phase motor	Capac-itor motor	Three-phase motor
Protection class motor	IP 55											
Frequency (Hz)	50											
Power P_1 (W)	470	310	470	310	470	310	470	310	470	310	470	310
I_{max} (A)	5.00	3.30/ 1.90	5.00	3.30/ 1.90	5.00	3.30/ 1.90	5.00	3.30/ 1.90	5.00	3.30/ 1.90	5.00	3.30/ 1.90

N 186.3 AP.9 | SP.9 | SP.13 E | ST.9 | ST.13 E

PERFORMANCE DATA

Series model	Flow rate at atm. pressure (l/min)	Max. operating pressure (bar rel./psig)	Ultimate vacuum (mbar abs.)
N 186.3 AP.9 E	23.0 ± 10 %	0.5/7.3	15
N 186.3 SP.9 E	23.0 ± 10 %	0.5/7.3	15
N 186.3 SP.13 E	23.0 ± 10 %	0.5/7.3	15
N 186.3 ST.9 E	21.0 ± 10 %	0.5/7.3	25
N 186.3 ST.13 E	21.0 ± 10 %	0.5/7.3	25

Flow rate determined at 20 °C, 1013 mbar abs.
(Pressure 0 to 1013 mbar abs. in accordance with ISO 21360-1/2)

N 186.3 __.9 E | S_.13 E

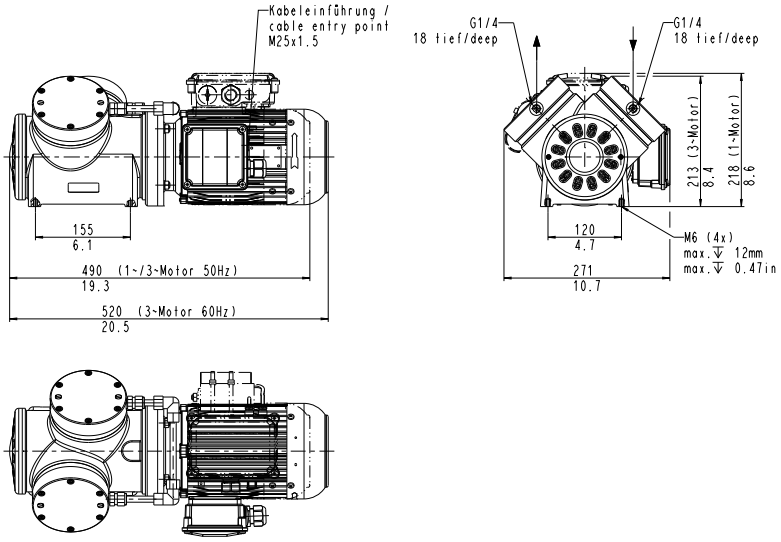

N 186.3 _P.__ E

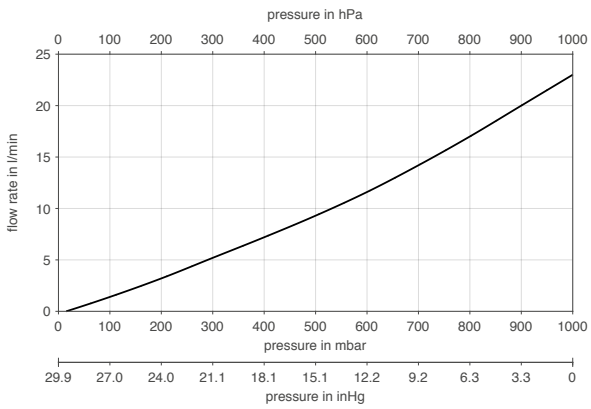

Flow rate determined at 20 °C, 1013 mbar abs.
(Pressure 0 to 1013 mbar abs. in accordance with ISO 21360-1/2)

N 186.3 _T.__ E

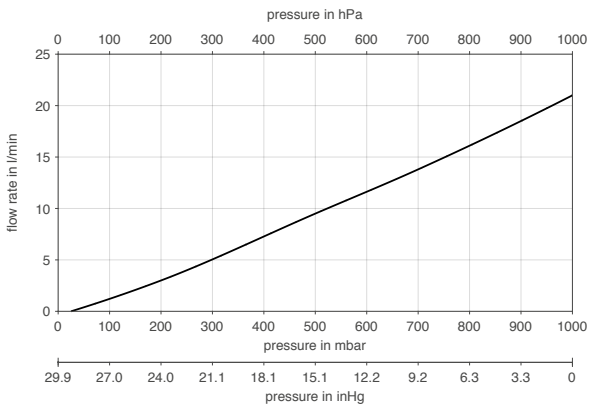

Flow rate determined at 20 °C, 1013 mbar abs.
(Pressure 0 to 1013 mbar abs. in accordance with ISO 21360-1/2)

N 186.3 | PUMP DOWN TIME FOR 20 LITER VESSEL

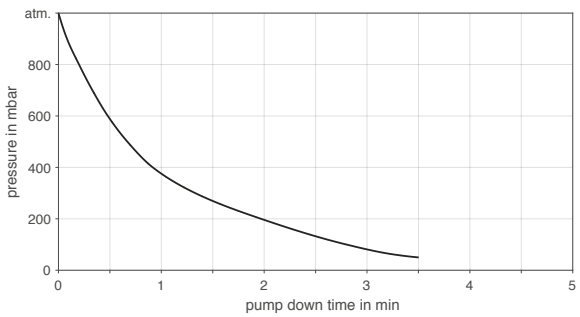

N 186.3 SP.12 E

PERFORMANCE DATA

Series model	Flow rate at atm. pressure (l/min)	Max. operating pressure (bar rel./psig)	Ultimate vacuum (mbar abs.)
N 186.3 SP.12 E	23.0 ± 10 %	0.5/7.3	15

Flow rate determined at 20 °C, 1013 mbar abs.
(Pressure 0 to 1013 mbar abs. in accordance with ISO 21360-1/2)

N 186.3 SP.12 E

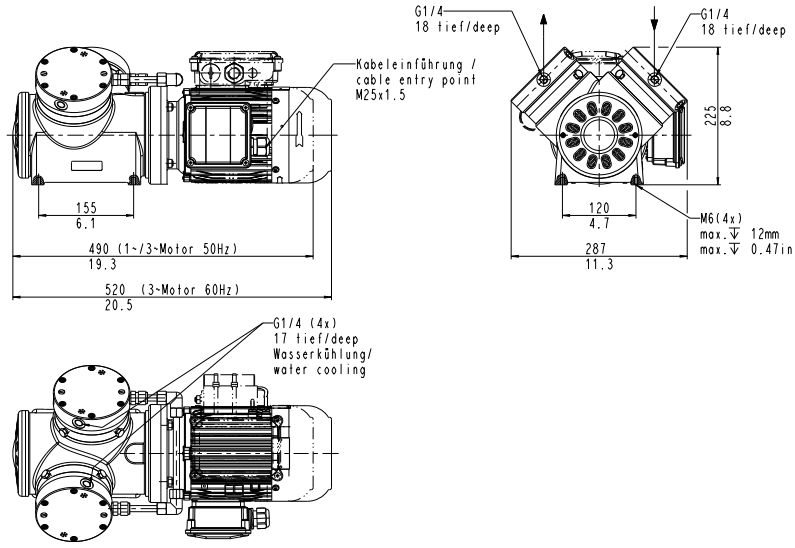

N 186.3 SP.12 E

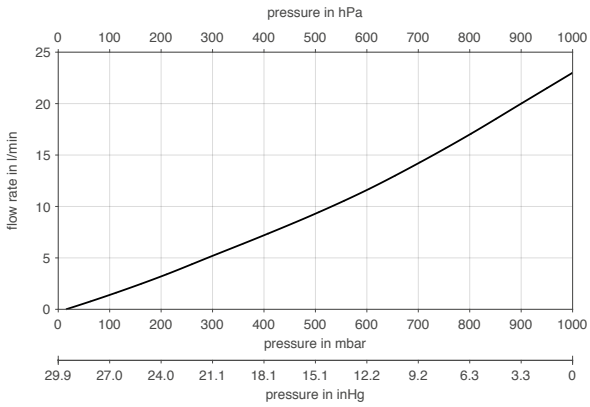

Flow rate determined at 20 °C, 1013 mbar abs.
(Pressure 0 to 1013 mbar abs. in accordance with ISO 21360-1/2)

N 186.3 | PUMP DOWN TIME FOR 20 LITER VESSEL

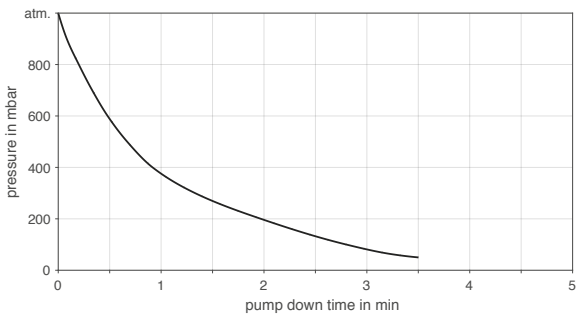

ACCESSORIES

Description	Part No.
Base plate with rubber-bonded metals	310102
Connection water cooling device S_.9 | S_.13	303901
Connection water cooling device SP.12	303902
Wrench for retainer plate	018816
O-ring for lock screw	026056
Inlet filter G 1/4	316661

SPARE PARTS

Description	Part No.
Spare parts kit N 186.3 _P.9 E	315460
Spare parts kit N 186.3 SP.13 E	315461
Spare parts kit N 186.3 ST.9 E	307823
Spare parts kit N 186.3 ST.13 E	315463
Spare parts kit N 186.3 SP.12 E	315462

The performance values for the series models shown on this data sheet were determined under test conditions.
The actual performance values may differ and depend in particular on the usage conditions and therefore on the specific application, on the parameters of the components involved in the user's system and on any technical modifications carried out which deviate from the standard configuration or the as delivered condition.

If individual designs have been created for specific customers on the basis of series models, other technical performance data may apply.
Before operation begins, the relevant operating instructions and/or assembly or installation instructions should be read and the safety information contained in these instructions should be noted.
KNF reserves the right to make changes to the product and the associated documentation without prior notice to the customer.

www.knf.com

KNF reserves the right to make technical changes without notice. KNF 01/2019. www.knf.com

YOUR LOCAL PARTNER AROUND THE WORLD

KNF SALES ORGANIZATION

Australia KNF Regional Office
Moreland West VIC 3055
Tel. +61 3 9386 4959
info@knf.com.au
www.knf.com.au

Benelux Netherlands KNF Verder B.V.
3451 GG Vleuten
Tel. +31 30 677 92 40
info@knf-verder.nl
www.knf-verder.nl

Benelux Belgium and Luxemburg
KNF Verder N.V.
2630 Aartselaar
Tel. +32 3 871 96 24
info@knf.be
www.knf.be

China KNF Technology (Shanghai) Co., Ltd.
Shanghai 201203
Tel. +86 21 5109 9695
info@knf.com.cn
www.knf.com.cn

France KNF Neuberger SAS
68128 Village-Neuf
Tel. +33 389 70 35 00
info@knf.fr
www.knf.fr

Germany KNF Neuberger GmbH
79112 Freiburg
Tel. +49 7664 5909 0
info@knf.de
www.knf.de

India KNF Pumps + Systems (India) Pvt. Ltd.
Hinjewadi Pune 411 057
Tel. +91 20 640 13 923
info@knfpumps.in
www.knfpumps.in

Italy KNF Italia S.r.l.
20063 Cernusco s. Naviglio (MI)
Tel. +39 02 929 04 91
info@knf.it
www.knf.it

Japan KNF Japan Co. Ltd.
Tokyo 104-0033
Tel. +81 3 3551 7931
info@knf.co.jp
www.knf.co.jp

Korea KNF Neuberger Ltd.
135-502 Seoul
Tel. +82 2 959 0255
knf@knfkorea.com
www.knfkorea.com

Latin America KNF Regional Office
Tel. +1 609 649 1010
gb@knf.com
www.knf.com/es

Morocco, Tunisia, Algeria
KNF Neuberger SAS
68128 Village-Neuf
Tel. +33 389 70 35 00
info@knf.fr
www.knf.fr

Singapore KNF Regional Office
Tel. +65 9722 1994
info@knf.com.sg
www.knf.com.sg

Sweden, Finland, Denmark, Norway
KNF Neuberger AB
117 43 Stockholm
Tel. +46 8 744 51 13
info@knf.se
www.knf.se

Switzerland KNF Neuberger AG
8362 Balterswil
Tel. +41 71 973 99 30
knf@knf.ch
www.knf.ch

UK, Ireland KNF Neuberger U.K., Ltd.
Witney, Oxfordshire OX28 4FA
Tel. +44 1993 77 83 73
info@knf.co.uk
www.knf.co.uk

USA, Canada KNF Neuberger, Inc.
Trenton, NJ 08691-1810
Tel. +1 609 890 8600
knfusa@knf.com
www.knfusa.com

KNF PRODUCT CENTERS

Gas Pumps KNF Neuberger GmbH
DE-79112 Freiburg
info@knf.de
www.knf.de

Micro Gas Pumps KNF Micro AG
CH-6260 Reiden
info@knf-micro.ch
www.knf-micro.ch

Liquid Pumps KNF Flodos AG
CH-6210 Sursee
info@knf-flodos.ch
www.knf-flodos.ch